NEWMECH ENGINEERING SDN BHD
(Co. No. 966425-D)

SPROCKET ROLLER

FIXED / ACCUMULATING TYPE

1 PLASTIC CHAIN SPROCKET FOR CHAIN 1/2"x11T
ROLLER WITH SPLINED/FRICTION HOUSING ON ONE SIDE ONLY.

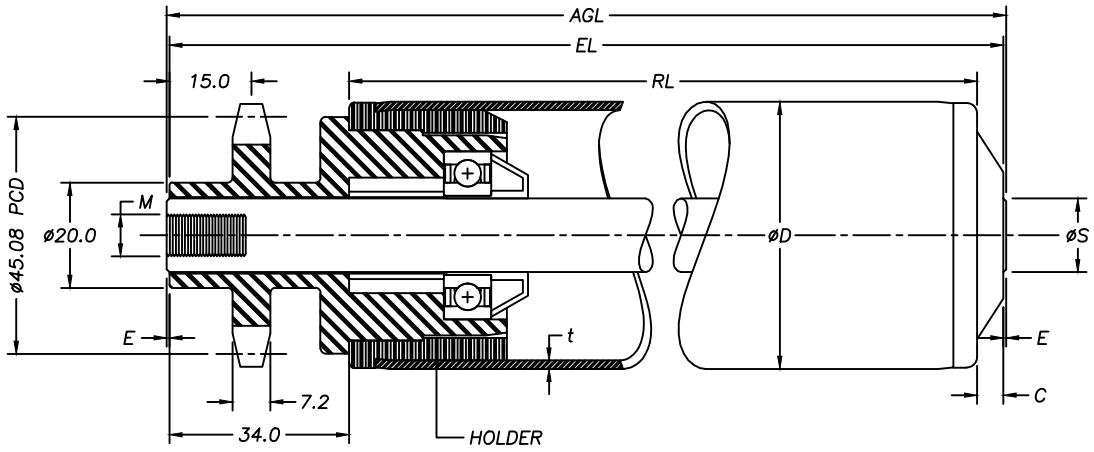

EL = RL+34mm
AGL = EL+1mm

*ACTUAL PIPE ø50 = 50.80mm
*ACTUAL PIPE ø60 = 60.15mm

LOAD CAPACITY :

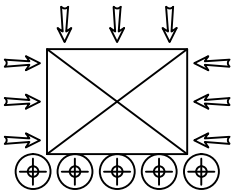

STATIC = 30 Kgs

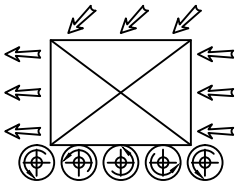

DYNAMIC = 40 Kgs

TUBE QUALITY	D x T	C	E	BEARING QUALITY	øS (mm)
M/S ZINC PLATED	Ø50 x 1.5thk	5	1	SEMI PRECISION STAINLESS STEEL PRECISION BEARING WITH 2RS SEALS	Ø14/M8 x 25 DP
M/S ZINC PLATED	Ø60 x 2.0thk	5	1		Ø14/M8 x 25 DP
M/S ZINC PLATED	Ø60 x 2.9thk	5	1		Ø14/M8 x 25 DP
STAINLESS STEEL	Ø50 x 1.5thk	5	1		Ø14/M8 x 25 DP
POLYURETHANE	Ø50 x 2.0thk	5	1		Ø14/M8 x 25 DP

NEWMECH ENGINEERING SDN. BHD.
(Co. No. 966425-D)
No. 53, Jln. Pendamar 27/90,
40000 Shah Alam, Selangor Darul Ehsan.
Tel : 03-5191 6280, 012-330 7338 ; Fax : 03-5191 4280
Email : newmech18@gmail.com, newmech9@gmail.com